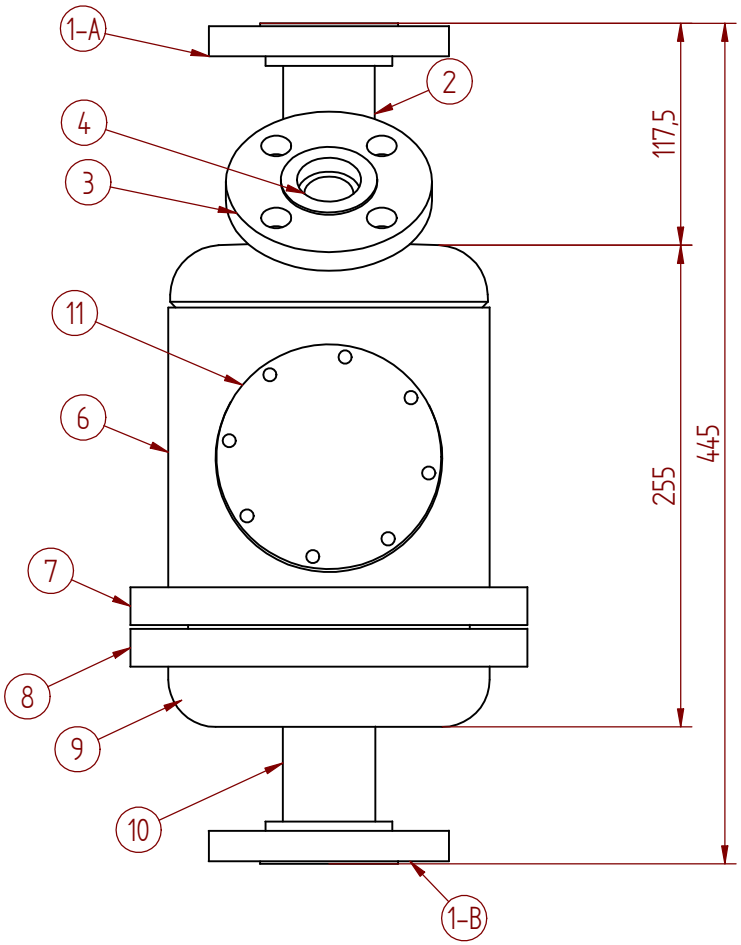

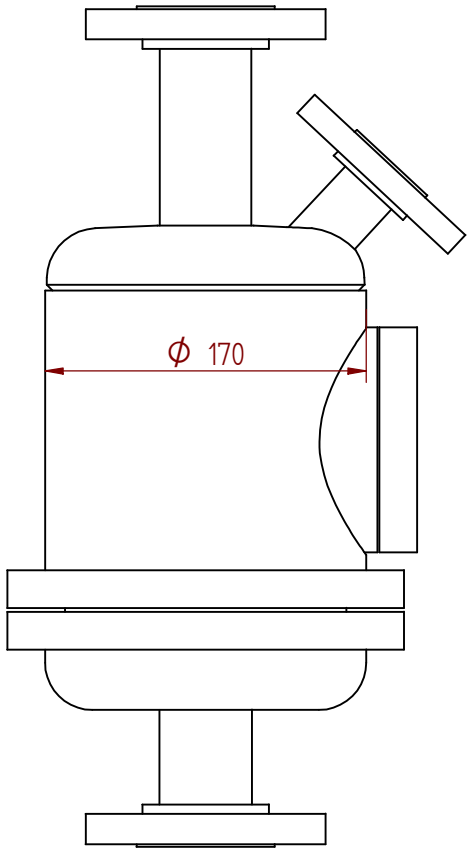

MATERIAL	QUANTITY	TITLE	DOCUMENT NO.	ITEM NO.
ST-37-2	2	FLANGE ASA 150 - 1 1/2"		1
ST-37-2	1	PIPE 1 1/2" LENGTH 120mm		2
ST-37-2	1	FLANGE ASA 150 - 1"		3
ST-37-2	1	PIPE 1" LENGTH 53mm		4
ST-37-2	1	TOP SKULLCAP 6"		5
ST-37-2	1	BODY PIPE 6"		6
ST-37-2	1	TOP RING 6"		7
ST-37-2	1	LOWER RING 6"		8
ST-37-2	1	LOWER SKULLCAP 6"-HOLE 49mm		9
ST-37-2	1	PIPE 1 1/2" LENGTH 80mm		10
ST-37-2	1	WINDOW STANDART RING		11

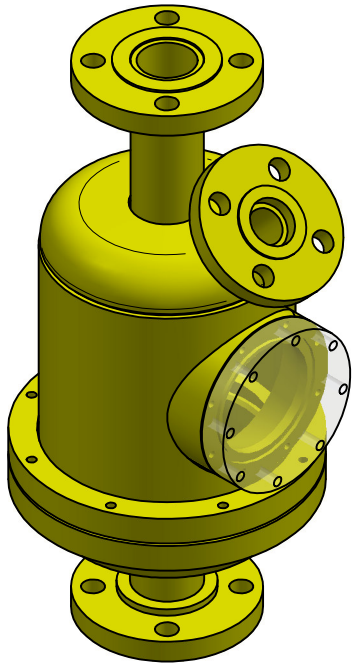

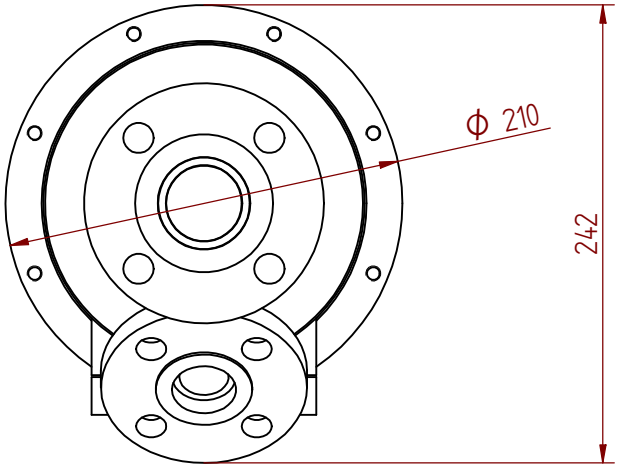

EMPTY WEIGHT : 14kg
WORKING WEIGHT : 20kg

Note : All dimensions are in m"m.

	Name	Date
DRAWN	Aviva H.	21/08/2007
CHECKED	Moti K.	21/08/2007
APPROVED		

C.Q.M Cooling Quality Management

Standard System: 6" STANDARD COLLECTOR SYSTEM

Title: 6 INC STANDARD COL. S.W.ASSEM

GENERAL DIMENSIONS

Scale: | Dft No: COL06-JP-AV-0067 | Sheet: 1 | Rev:

FILE NAME:
0067 6 INC STANDARD COL. S.W.ASSEM(GENERAL).dft

L:\cqm-docs\FILES\AVIVA\6 0067\אינץ 6 שרטוטים\מערכות כדוריות\אוספים\אוסף מי ים\אוסף מי ים INC STANDARD COL. S.W.ASSEM(GENERAL).dft
\\Server\Company Shared Folders\cqm-docs\FILES\MOTY\אוסף מי ים 6 אניץ מורכב שני חלקים\מזרקים\שרטוטים.asm

This drawing in the property of CQM Ltd. and must not be copied or reissued without CQM Ltd. permission