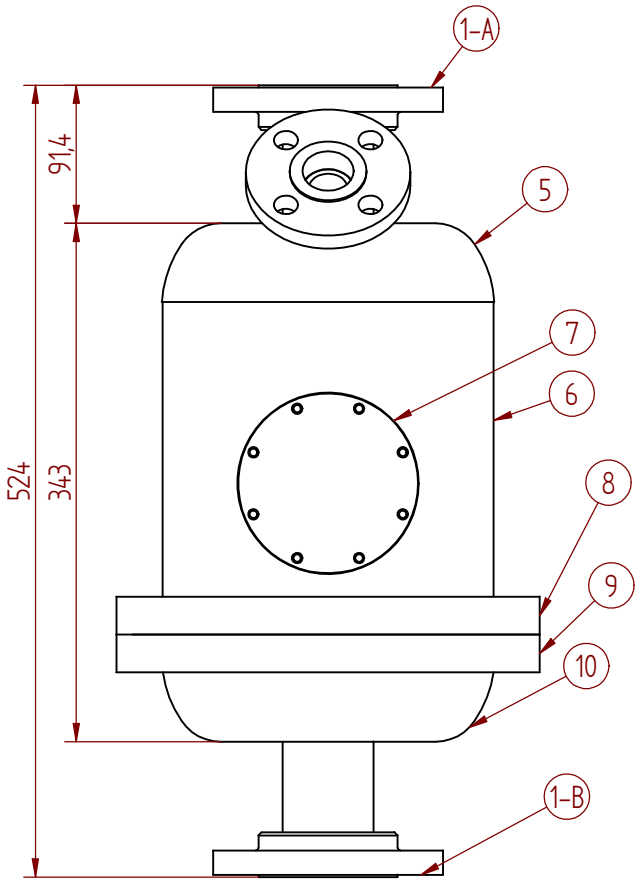

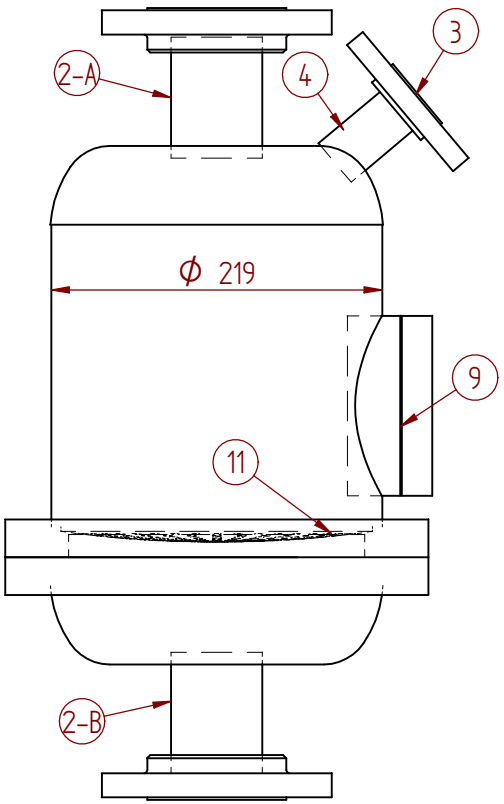

MATERIAL	QUANTITY	TITLE	DOCUMENT NO.	ITEM NO.
C.S. ST-37	2	2" ND16 FLANGE		1
C.S. ST-37	2	2" x 80mm PIPE		2
C.S. ST-37	1	1" ASA 150 FLANGE		3
C.S. ST-37	1	1" PIPE		4
C.S. ST-37	1	8" TOP COVER DOME		5
C.S. ST-37	1	8" x 200mm BODY PIPE		6
C.S. ST-37	1	WINDOW RING		7
C.S. ST-37	1	8" TOP RING		8
C.S. ST-37	1	8" DOWN RING		9
C.S. ST-37	1	8" DOWN COVER DOME		10
C.S. ST-37	1	NET BASE		11

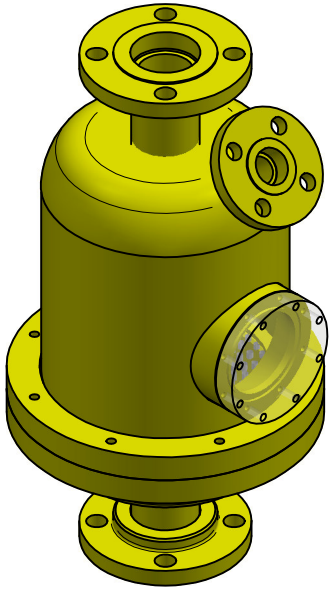

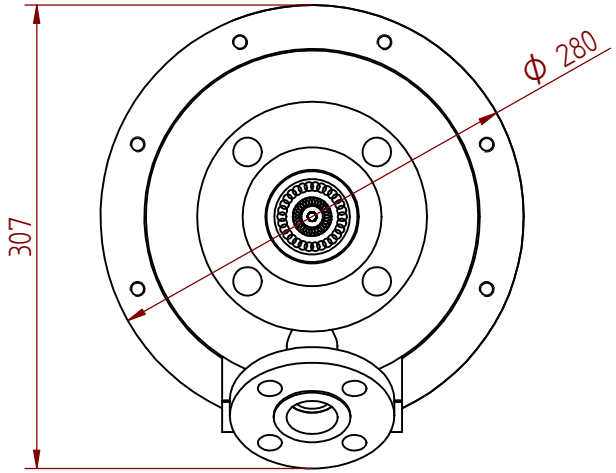

EMPTY WEIGHT : 26kg
WORKING WEIGHT : 40kg

Note : All dimensions are in m"m.

	Name	Date
DRAWN	Aviva H.	21/08/2007
CHECKED	Moti K.	21/08/2007
APPROVED		

C.Q.M Cooling Quality Management

Standard System: COLLECTOR SEA WATER 8"

Title: 08INC COLLECTOR S.W. ND16 - JAPAN
GENERAL DIMENSIONS

Scale: | Dft No: COL08-SW-AV-0066 | Sheet: 1 | Rev:

FILE NAME:
0066 08INC COLLECTOR S.W. ND16(GENERAL)-JAPAN.dft

L:\cqm-docs\FILES\AVIVA\08 0066\אינץ 12 אוסף מי ים\אוסף מי ים\אוספים\מערכות כדוריות\שרטוטים\INC COLLECTOR S.W. ND16(GENERAL)-JAPAN.dft
\\Server\Company Shared Folders\cqm-docs\FILES\MOTY\אינץ 8 אוסף מזרק\אוסף מזרק\אוסף מזרק\אוסף מזרקים מי ים\שרטוטים\אינץX2AB.asm.ND16

This drawing in the property of CQM Ltd. and must not be copied or reissued without CQM Ltd. permission